647.9402
B 115747
PCV. B

Work Order ID 115747

April-04-14 10:20:44 AM

115747

Item ID: 647.9402 **Accept** *N900040100* **Setup Start** *NS1*

Revision ID: **Stop** *NS2*

Item Name: Lower Deflector Assembly, Long

Start Date: 4/04/14 **Start Qty:** 26.00 *26*

Required Date: 4/04/14 **Req'd Qty:** 26.00 *26*

Reference:

Cust Item ID:

Customer:

Run Start *NR1*

Stop *NR2*

Approvals: **Process Plan:** MCS **Date:** 4-04-14 **Tooling:** _____ **Date:** _____

QC: _____ **Date:** _____ **SPC (Y/N):** _____ **Date:** _____

Sequence ID/ Work Center ID	Operation Description	Set Up/ Run Hours	Tool ID	Tool #	Plan Code	Accept Qty	Reject Qty	Reject Number	Insp. Stamp
Draw Nbr: 647.9400	Revision Nbr: B								
100	Pick Kit	0.00			DAS 30 9-89	2			JUL 30 2015
100	Memo	0.00							
Packaging									
Packaging									
110		0.00			DAS 30 9-89	2			JUL 30 2015
110									
Small Fab	Memo	0.00							
Small Fab	ASSEMBLE AS PER DWG.								
120	QC5- Inspect part completeness to step on W/O	0.00				(2)			DAS 38 9-89
120	Memo	0.00							
QC									OCT 08 2015
Quality Control									

DQA: [illegible] Date: 16.08.29

QA Closed: [illegible] Date: 16.08.15

WORK ORDER NON-CONFORMANCE / UPDATE

DART AEROSPACE

Work Order update only ☐

Work Order: 115747

Part No. 647,9402

NCR No. 15/08/19

DISPOSITION

Rework	☑
Scrap	☐
Use-as-is	☐
Suspected Unapproved	☐

AGAINST DEPARTMENT/PROCESS

Skid-tube ☐	Crosstube ☐	Water Jet ☐	Engineering ☐
Machining ☐	Small Fab ☐	Prod. Eng. Coor. ☐	Quality ☐
Thermoforming ☐	Finishing ☐	Rec/Store/Packaging ☐	Other ☑
Large Fab ☐	Composite ☐	Supplier ☐	☐

Root Cause		Date	Step	Qty	Description of work order update or non-conformance	Initial Chief Eng	Action Description	Sign & Date	Verification	QC Inspector
Design	☐	15681A	110	2	Hole (B1) on 647,9415 is at 0,249Ø. should be 0,253Ø. Those parts where purchased from Apical.	DAS 9 9-89 15-10-20	Rework part. Open (B1) hole to 0,253"Ø. - Realodine hold	DAS 15/08/19 DAS 38 9-89 OCT 13 2015	DAS 38 9-89 OCT 13 2015	DAS 9 9-89 15-10-20
Doc/Data	☐									
Equip/Tooling	☐									
Handling/Pre	☐									
Material	☒									
Operator	☐									
Offset/Setup	☐									
Process	☐									
Supplier	☐									
Training	☐									
Transport	☐									
Unapproved	☐									

FAULT CATEGORY

Landing Gear

- ☐ Bending
- ☐ Centre Not Concentric
- ☐ Cracks
- ☐ Crimp/Kink/Ripple/Wave
- ☐ Cuffs
- ☐ Crushing
- ☐ Heat Treat
- ☐ Inspection Strip in Tube
- ☐ Marks/Chatter
- ☐ Turning Sequence
- ☐ Wave/Twist in Tube

General

- ☐ Bend
- ☐ BOM/Route
- ☐ Broken/Damage/Defect
- ☐ Burrs
- ☐ Contamination
- ☐ Countersink
- ☐ Cut Too Short
- ☐ Drawing
- ☑ Drill Holes
- ☐ Finish
- ☐ Fit/Function
- ☐ Folio/Program
- ☐ Grain
- ☐ Hardware
- ☐ Inspection Incomplete/Unqualified
- ☐ Instructions Incomplete/Unclear
- ☐ Misaligned/off center
- ☐ Mislabeled
- ☐ Misread
- ☐ Off-set
- ☐ Out of Calibration
- ☐ Out of Sequence
- ☐ Outside Dimensions
- ☑ Over/Under tolerance
- ☐ Part Incorrect
- ☐ Part Lost/Missing
- ☐ Part Moved
- ☐ Positioned Wrong
- ☐ Power Loss/Surge
- ☐ Pressure/Forced
- ☐ Set-up
- ☐ Temperature/Cure
- ☐ Weld
- ☐ Wrong Stock Pulled
- ☐ Other

Item ID: 647.9402 **Accept** *N9000401000* **Setup Start** *NS1*
Revision ID: **Stop** *NS2*
Item Name: Lower Deflector Assembly, Long

Start Date: 4/04/14 **Start Qty:** 26.00 *26*
Required Date: 4/04/14 **Req'd Qty:** 26.00 *26*
Reference:

Cust Item ID:
Customer:

Run Start *NR1*
Stop *NR2*

Approvals: **Process Plan:** _____ **Date:** _____ **Tooling:** _____ **Date:** _____
QC: _____ **Date:** _____ **SPC (Y/N):** _____ **Date:** _____

Sequence ID/ Work Center ID	Operation Description	Set Up/ Run Hours	Tool ID	Tool #	Plan Code	Accept Qty	Reject Qty	Reject Number	Insp. Stamp
150	Identify as per dwg & Stock Location: rack 45	0.00				2 SMB 15/oct/14			
150									
Packaging	**Memo**	0.00							
Packaging	IDENTIFY AS PER APPICAL MPP-120								
160	QC21- Final Inspection - Work Order Release	0.00				MCJ	OCT 15 2015		
160									
QC	**Memo**	0.00							
Quality Control									

SH 20151016

DQA: _____ Date: _____

WORK ORDER NON-CONFORMANCE / UPDATE

DART AEROSPACE

QA Closed: Date: Work Order update only ☐

Work Order: _____

Part No. _____

NCR No. _____

DISPOSITION

Rework ☐
Scrap ☐
Use-as-is ☐
Suspected Unapproved ☐

AGAINST DEPARTMENT/PROCESS

Skid-tube ☐ Crosstube ☐ Water Jet ☐ Engineering ☐
Machining ☐ Small Fab ☐ Prod. Eng. Coor. ☐ Quality ☐
Thermoforming ☐ Finishing ☐ Rec/Store/Packaging ☐ Other ☐
Large Fab ☐ Composite ☐ Supplier ☐ ☐

Root Cause		Date	Step	Qty	Description of work order update or non-conformance	Initial Chief Eng	Action Description	Sign & Date	Verification	QC Inspector
Design	☐									
Doc/Data	☐									
Equip/Tooling	☐									
Handling/Pre	☐									
Material	☐									
Operator	☐									
Offset/Setup	☐									
Process	☐									
Supplier	☐									
Training	☐									
Transport	☐									
Unapproved	☐									

FAULT CATEGORY

Landing Gear

☐ Bending
☐ Centre Not Concentric
☐ Cracks
☐ Crimp/Kink/Ripple/Wave
☐ Cuffs
☐ Crushing
☐ Heat Treat
☐ Inspection Strip in Tube
☐ Marks/Chatter
☐ Turning Sequence
☐ Wave/Twist in Tube

General

☐ Bend
☐ BOM/Route
☐ Broken/Damage/Defect
☐ Burrs
☐ Contamination
☐ Countersink
☐ Cut Too Short
☐ Drawing
☐ Drill Holes
☐ Finish
☐ Fit/Function
☐ Folio/Program
☐ Grain
☐ Hardware
☐ Inspection Incomplete/Unqualified
☐ Instructions Incomplete/Unclear
☐ Misaligned/off center
☐ Mislabeled
☐ Misread
☐ Off-set
☐ Out of Calibration
☐ Out of Sequence
☐ Outside Dimensions
☐ Over/Under tolerance
☐ Part Incorrect
☐ Part Lost/Missing
☐ Part Moved
☐ Positioned Wrong
☐ Power Loss/Surge
☐ Pressure/Forced
☐ Set-up
☐ Temperature/Cure
☐ Weld
☐ Wrong Stock Pulled
☐ Other

_____
_____
_____

Picklist Print

April-04-14 10:20:44 AM

Work Order ID: 115747 *115747*

Parent Item: 647.9402 *647 9402*

Parent Item Name: Lower Deflector Assembly, Long

Start Date: 4/04/14 **Required Date:** 4/04/14

Start Qty: 26.00 **Required Qty:** 26.00

Comments: IPP REV:A 14.03.20 NEW ISSUE DD VERF:JLM

Component Item ID / Item Name	Replacement Item ID	Mfg / Purch	Bin Item	Primary Location	Last Location	Route Seq ID	Unit of Measure	Qty on Hand	Qty per Kit	Total Qty	Qty Issued	Date Issued	Status
647.9501 *647 9501* Quick Release Pin Assembly		Manufactured	No				Each	100.0000	**	26 2		AB 14-6-11	
										2		AB 14-12-1	
				Location			Loc Qty		Loc Code				
				ST544			100						
				92907			60						
				92919			30						
				93349			10						
647.9414 *647 9414* Lower Deflector, Long Tip		Manufactured	No				Each	6.0000	**	26 2		AB 14-6-11	
				Location			Loc Qty		Loc Code				
				CA			6						
				110398			6			(2)			
647.9019 *647 9019* Hinge		Purchased	No		129311		Each	0.0000	**	52 4 (4)		AB 14-6-11	
CR3213-4-8 *CR3213-4-8* Rivet		Purchased	No				Each	200.0000	**	52 4		AB 14-6-11	
				Location			Loc Qty		Loc Code				
				ST329			200						
				123785			200			(4)			

DQA: _____ Date: _____

WORK ORDER NON-CONFORMANCE / UPDATE

DART AEROSPACE

QA Closed: Date:

Work Order update only ☐

Work Order: _____

Part No. _____

NCR No. _____

DISPOSITION

- Rework ☐
- Scrap ☐
- Use-as-is ☐
- Suspected Unapproved ☐

AGAINST DEPARTMENT/PROCESS

- Skid-tube ☐
- Machining ☐
- Thermoforming ☐
- Large Fab ☐
- Crosstube ☐
- Small Fab ☐
- Finishing ☐
- Composite ☐
- Water Jet ☐
- Prod. Eng. Coor. ☐
- Rec/Store/Packaging ☐
- Supplier ☐
- Engineering ☐
- Quality ☐
- Other ☐

Root Cause	Date	Step	Qty	Description of work order update or non-conformance	Initial Chief Eng	Action Description	Sign & Date	Verification	QC Inspector
Design ☐ Doc/Data ☐ Equip/Tooling ☐ Handling/Pre ☐ Material ☐ Operator ☐ Offset/Setup ☐ Process ☐ Supplier ☐ Training ☐ Transport ☐ Unapproved ☐			2	Pull reworked 647-9501 with correct pip pins	✓	→ NCR 14.395			

FAULT CATEGORY

Landing Gear

- ☐ Bending
- ☐ Centre Not Concentric
- ☐ Cracks
- ☐ Crimp/Kink/Ripple/Wave
- ☐ Cuffs
- ☐ Crushing
- ☐ Heat Treat
- ☐ Inspection Strip in Tube
- ☐ Marks/Chatter
- ☐ Turning Sequence
- ☐ Wave/Twist in Tube

General

- ☐ Bend
- ☐ BOM/Route
- ☐ Broken/Damage/Defect
- ☐ Burrs
- ☐ Contamination
- ☐ Countersink
- ☐ Cut Too Short
- ☐ Drawing
- ☐ Drill Holes
- ☐ Finish
- ☐ Fit/Function
- ☐ Folio/Program
- ☐ Grain
- ☐ Hardware
- ☐ Inspection Incomplete/Unqualified
- ☐ Instructions Incomplete/Unclear
- ☐ Misaligned/off center
- ☐ Mislabeled
- ☐ Misread
- ☐ Off-set
- ☐ Out of Calibration
- ☐ Out of Sequence
- ☐ Outside Dimensions
- ☐ Over/Under tolerance
- ☐ Part Incorrect
- ☐ Part Lost/Missing
- ☐ Part Moved
- ☐ Positioned Wrong
- ☐ Power Loss/Surge
- ☐ Pressure/Forced
- ☐ Set-up
- ☐ Temperature/Cure
- ☐ Weld
- ☐ Wrong Stock Pulled
- ☐ Other

_____

_____

_____

Picklist Print

April-04-14 10:20:44 AM

Work Order ID: 115747 *115747*

Parent Item: 647.9402 *647 9402*

Parent Item Name: Lower Deflector Assembly, Long

Start Date: 4/04/14 **Required Date:** 4/04/14

Start Qty: 26.00 **Required Qty:** 26.00

AN3C7A Purchased No Each 863.0000 ** 26 2 AB 14-6-11

AN3C7A

Bolt

Location	Loc Qty	Loc Code	
FG	10		
122141	10		
ST513	853		(2)
m125709	853		

MS27039-1-15 Purchased No Each 1,063.000 ** 26 2 AB 14-6-11

MS27039-1-15

Screw

Location	Loc Qty	Loc Code	
ST306	463		(1)
124326	463		
ST506	600		2
m127916	600		

MS21042-3 MS21042L3 Purchased No Each 56.0000 ** 52 4 AB 14-6-11

MS21042-3

Nut

128770

Location	Loc Qty	Loc Code	
ST313	56	MC931	(2)
123185	14		
123352	42		

NAS1515H3L Purchased No Each 273.0000 ** 52 4 AB 14-6-11

NAS1515H3L

Washer

Location	Loc Qty	Loc Code	
FG	36		
102472	36		
ST297	237		(4)
m127831	237		

DQA: _____ Date: _____

WORK ORDER NON-CONFORMANCE / UPDATE

DART AEROSPACE

QA Closed: Date:

Work Order update only ☐

Work Order: _____

Part No. _____

NCR No. _____

DISPOSITION

- Rework ☐
- Scrap ☐
- Use-as-is ☐
- Suspected Unapproved ☐

AGAINST DEPARTMENT/PROCESS

- Skid-tube ☐
- Machining ☐
- Thermoforming ☐
- Large Fab ☐
- Crosstube ☐
- Small Fab ☐
- Finishing ☐
- Composite ☐
- Water Jet ☐
- Prod. Eng. Coor. ☐
- Rec/Store/Packaging ☐
- Supplier ☐
- Engineering ☐
- Quality ☐
- Other ☐

Root Cause		Date	Step	Qty	Description of work order update or non-conformance	Initial Chief Eng	Action Description	Sign & Date	Verification	QC Inspector
Design	☐									
Doc/Data	☐									
Equip/Tooling	☐									
Handling/Pre	☐									
Material	☐									
Operator	☐									
Offset/Setup	☐									
Process	☐									
Supplier	☐									
Training	☐									
Transport	☐									
Unapproved	☐									

FAULT CATEGORY

Landing Gear

- ☐ Bending
- ☐ Centre Not Concentric
- ☐ Cracks
- ☐ Crimp/Kink/Ripple/Wave
- ☐ Cuffs
- ☐ Crushing
- ☐ Heat Treat
- ☐ Inspection Strip in Tube
- ☐ Marks/Chatter
- ☐ Turning Sequence
- ☐ Wave/Twist in Tube

General

- ☐ Bend
- ☐ BOM/Route
- ☐ Broken/Damage/Defect
- ☐ Burrs
- ☐ Contamination
- ☐ Countersink
- ☐ Cut Too Short
- ☐ Drawing
- ☐ Drill Holes
- ☐ Finish
- ☐ Fit/Function
- ☐ Folio/Program
- ☐ Grain
- ☐ Hardware
- ☐ Inspection Incomplete/Unqualified
- ☐ Instructions Incomplete/Unclear
- ☐ Misaligned/off center
- ☐ Mislabeled
- ☐ Misread
- ☐ Off-set
- ☐ Out of Calibration
- ☐ Out of Sequence
- ☐ Outside Dimensions
- ☐ Over/Under tolerance
- ☐ Part Incorrect
- ☐ Part Lost/Missing
- ☐ Part Moved
- ☐ Positioned Wrong
- ☐ Power Loss/Surge
- ☐ Pressure/Forced
- ☐ Set-up
- ☐ Temperature/Cure
- ☐ Weld
- ☐ Wrong Stock Pulled
- ☐ Other

_____

_____

_____

Picklist Print

April-04-14 10:20:44 AM

Work Order ID: 115747 *115747*

Parent Item: 647.9402 *647 9402*

Parent Item Name: Lower Deflector Assembly, Long

Start Date: 4/04/14 **Required Date:** 4/04/14

Start Qty: 26.00 **Required Qty:** 26.00

647.9415 Purchased No 129311 Each 0.0000 ~~26~~ 2

647 9415 ** (2) AL 14-6-11

Lower Deflector, Long

NAS1149F0332P 128401 10 AL 14-6-11

~~601 3202~~ ~~B 105197~~ (2) ~~FF~~ ~~JUN 11 2015~~

~~CbL 460~~ ~~M131619~~ 2 ~~FF~~ ~~JUN 11 2015~~

~~CBL 1240~~ ~~M 130006~~ 18" ~~FF~~ ~~JUN 11 2015~~

DQA: _____ Date: _____

WORK ORDER NON-CONFORMANCE / UPDATE

QA Closed: Date: Work Order update only ☐

Work Order: _____

Part No. _____

NCR No. _____

DISPOSITION

Rework ☐
Scrap ☐
Use-as-is ☐
Suspected Unapproved ☐

AGAINST DEPARTMENT/PROCESS

Skid-tube ☐ Crosstube ☐ Water Jet ☐ Engineering ☐
Machining ☐ Small Fab ☐ Prod. Eng. Coor. ☐ Quality ☐
Thermoforming ☐ Finishing ☐ Rec/Store/Packaging ☐ Other ☐
Large Fab ☐ Composite ☐ Supplier ☐ ☐

Root Cause		Date	Step	Qty	Description of work order update or non-conformance	Initial Chief Eng	Action Description	Sign & Date	Verification	QC Inspector
Design	☐									
Doc/Data	☐									
Equip/Tooling	☐									
Handling/Pre	☐									
Material	☐									
Operator	☐									
Offset/Setup	☐									
Process	☐									
Supplier	☐									
Training	☐									
Transport	☐									
Unapproved	☐									

FAULT CATEGORY

Landing Gear

☐ Bending
☐ Centre Not Concentric
☐ Cracks
☐ Crimp/Kink/Ripple/Wave
☐ Cuffs
☐ Crushing
☐ Heat Treat
☐ Inspection Strip in Tube
☐ Marks/Chatter
☐ Turning Sequence
☐ Wave/Twist in Tube

General

☐ Bend
☐ BOM/Route
☐ Broken/Damage/Defect
☐ Burrs
☐ Contamination
☐ Countersink
☐ Cut Too Short
☐ Drawing
☐ Drill Holes
☐ Finish
☐ Fit/Function
☐ Folio/Program
☐ Grain
☐ Hardware
☐ Inspection Incomplete/Unqualified
☐ Instructions Incomplete/Unclear
☐ Misaligned/off center
☐ Mislabeled
☐ Misread
☐ Off-set
☐ Out of Calibration
☐ Out of Sequence
☐ Outside Dimensions
☐ Over/Under tolerance
☐ Part Incorrect
☐ Part Lost/Missing
☐ Part Moved
☐ Positioned Wrong
☐ Power Loss/Surge
☐ Pressure/Forced
☐ Set-up
☐ Temperature/Cure
☐ Weld
☐ Wrong Stock Pulled
☐ Other

_____
_____
_____

APICAL INDUSTRIES, INC.	ENGINEERING CHANGE NOTICE NO. 04389				SHEET 1 OF 1
	DWG NO. 647.9400	REV: A	PREPARED BY J. SOTO	DATE: 01/28/2014	EFFECT ON DWG ☒ INC. ☐ UNINC.
	DWG TITLE: DEFLECTORS				
	APPROVED BY: ENGR	MFG	QC	EFF. NEXT ORDER	
TRANSACTION CODES (TC): A-ADD C-CREATE R-REVISE D-DELETE	REASON: REVISED, ADDED, & DELETED INSPECTION DIMENSIONS TO 647.9414.				ECR: D-14-01

SHEET 8, ZONE C3 WAS:

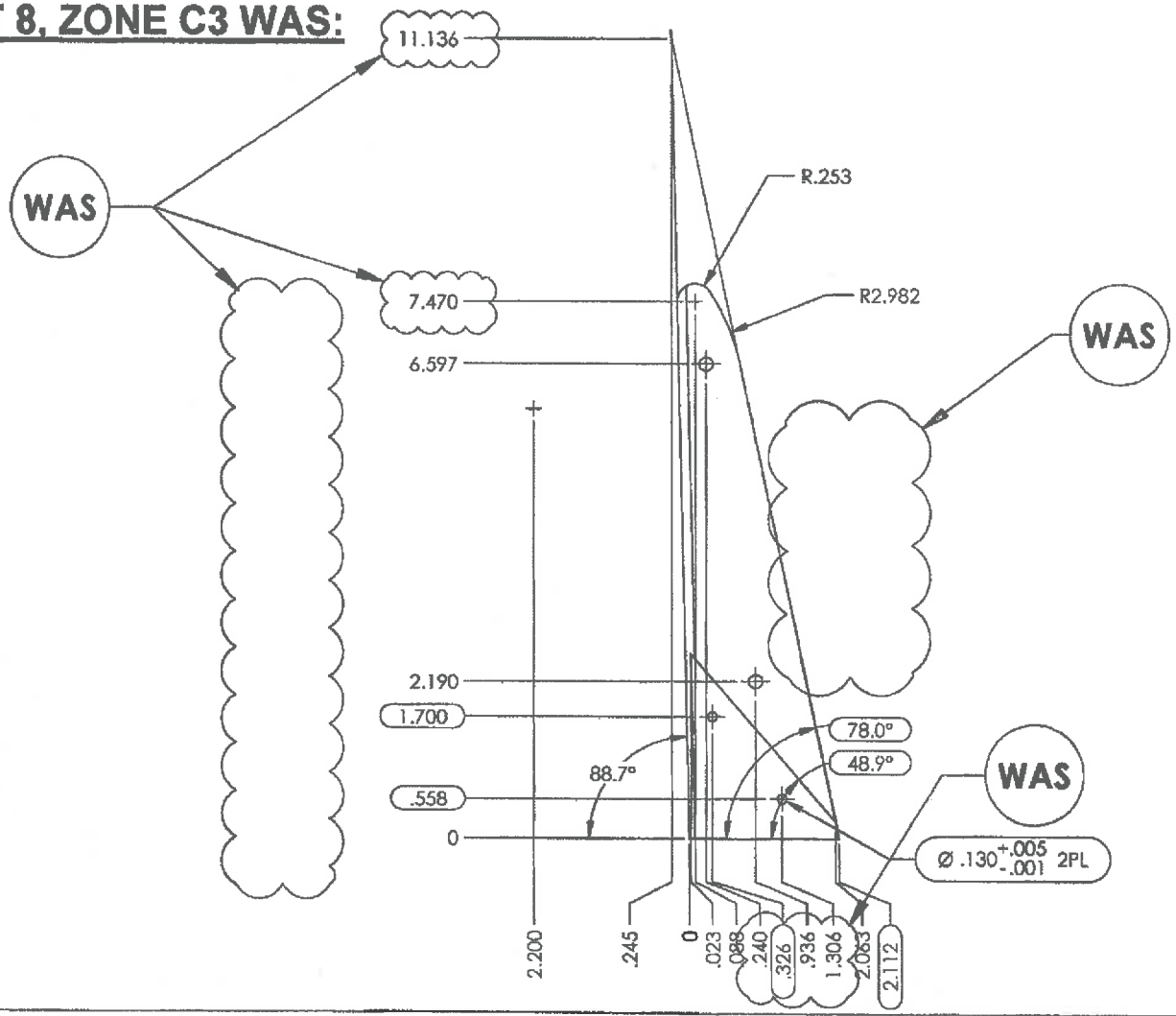

SHOP COPY RETURN TO ENGINEERING UNCONTROLLED COPY SUBJECT TO AMENDMENT WITHOUT NOTICE WORK ORDER NO. 115747 MCJ 14-04-08

DOCUMENTS EFFECTED: ☐ MDL ☐ INSTALL INSTRUCTIONS ☐ ICA ☐ FMS ☐ BOM	CHANGE CATEGORY ☐ MAJOR ☒ MINOR	DER REVIEW REQUIRED ☐ YES ☒ NO

THE INFORMATION CONTAINED IN THIS DRAWING IS THE SOLE PROPERTY OF APICAL INDUSTRIES. ANY REPRODUCTION IN PART OR WHOLE WITHOUT THE WRITTEN PERMISSION OF APICAL INDUSTRIES IS PROHIBITED.

REVISIONS			
REV.	DESCRIPTION	DATE	APPROVED
	LAST PROTOTYPE RELEASE: P01		
NAC	INITIAL RELEASE	06-09-10	P. BRAVO
A	INCORPORATE ECN 03007, 03065, 03213 & 03654.	10-23-12	J. GARDNER
B	INCORPORATE ECN 03739, 03762, 04288 & 04389.	01-28-14	P. BRAVO

NOTES: UNLESS OTHERWISE SPECIFIED

1. MATERIAL: ALUMINUM 7075-T651 PER AMS-QQ-A-250/12. AMS-QQ-A-200/11 IS AN ACCEPTABLE ALTERNATIVE.
2. FINISH: HARD ANODIZE IAW MIL-A-8625 TYPE III, CLASS 2, COLOR BLACK;
3. DE BURR AND BREAK ALL SHARP EDGES.
4. IDENTIFY IAW MPP-120. LASER ETCH P/N AND REVISION, 12 PT. CENTURY GOTHIC.
5. ALL DIMENSIONS SHOWN PRIOR TO FINISH.
6. APPLY F/N 17 TO FAYING SURFACES.
7. FINISH: PRETREAT PR-148 ADHESION PROMOTER, PRIME IAW MIL-P-23377J, TYPE I, CLASS N; 1-2 MIL MAX. APPLY FINISH AFTER ASSEMBLY.
8. TORQUE 15-20 IN.-LBS.
9. DIMENSION SHOWN IS FOR INSPECTION AFTER FINISHING.

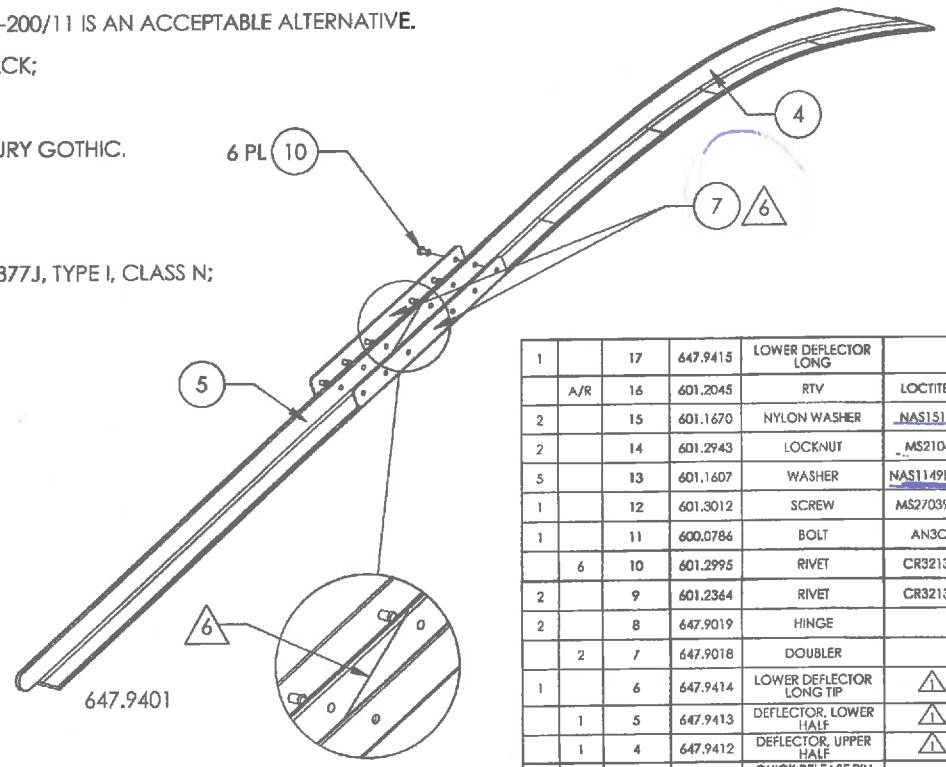

.9402	.9401	FIND #	PART #	DESCRIPTION	MAT'L	SPEC.
1		17	647.9415	LOWER DEFLECTOR LONG		
	A/R	16	601.2045	RTV	LOCTITE 598	
2		15	601.1670	NYLON WASHER	NAS1515H3L	
2		14	601.2943	LOCKNUT	MS21042-3	
5		13	601.1607	WASHER	NAS1149F0332P	
1		12	601.3012	SCREW	MS27039-1-15	
1		11	600.0786	BOLT	AN3C7A	
	6	10	601.2995	RIVET	CR3213-6-6	
2		9	601.2364	RIVET	CR3213-4-8	
2		8	647.9019	HINGE		
	2	7	647.9018	DOUBLER		
1		6	647.9414	LOWER DEFLECTOR LONG TIP	1	2 7
	1	5	647.9413	DEFLECTOR, LOWER HALF	1	2
	1	4	647.9412	DEFLECTOR, UPPER HALF	1	2
1		3	647.9501	QUICK RELEASE PIN ASSY		
		2	647.9411	UPPER DEFLECTOR	1	2 7
		1	647.9410	LOWER DEFLECTOR	1	2 7
X			647.9402	LOWER DEFLECTOR LONG ASSY		
	X		647.9401	DEFLECTOR ASSY		7

QTY | PARTS LIST

NEXT ASSY (S): 647.8900, 647.9200

ORIGINAL DATE (MO-DA-YR): 06-09-10
DRAWN BY: R. ROBANO | CHECKED: P. BRAVO
ENGINEERING APPROVAL: P. BRAVO 06-09-10
CONTRACT No.

UNLESS OTHERWISE SPECIFIED DIMENSIONS ARE IN INCHES
TOLERANCES ARE:
2 PLACE DECIMALS ±.03
3 PLACE DECIMALS ±.010
ANGLES ± 3°

APICAL INDUSTRIES
2608 TEMPLE HEIGHTS DR.
OCEANSIDE, CA. 92056-3512 (760)724-5300

DEFLECTORS

SIZE: B | CAGE CODE: 07MZ6 | DWG. NO.: 647.9400 | REV.: B
SCALE: NONE | SHEET: 1 OF 9

601.5202

THE INFORMATION CONTAINED IN THIS DRAWING IS THE SOLE PROPERTY OF APICAL INDUSTRIES ANY REPRODUCTION IN PART OR WHOLE WITHOUT THE WRITTEN PERMISSION OF APICAL INDUSTRIES IS PROHIBITED.

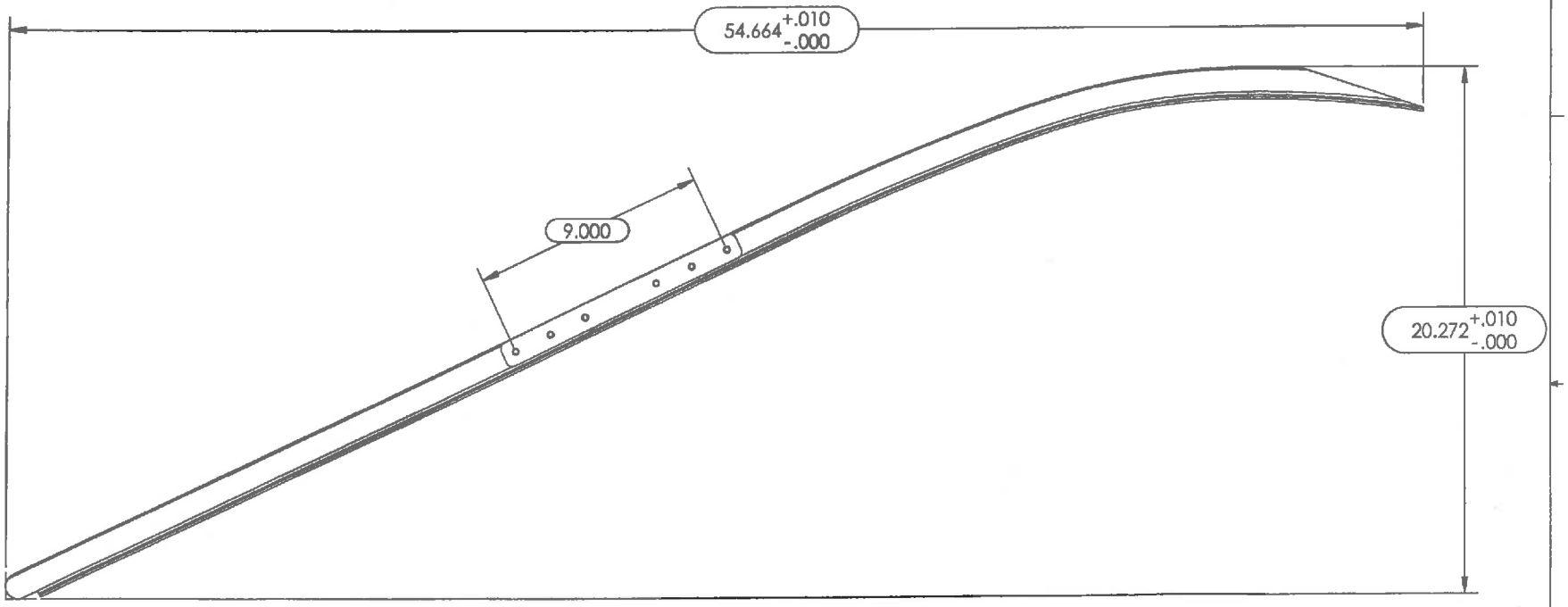

ORIGINAL DATE (MO-DA-YR) 06-09-10	APICAL INDUSTRIES 2608 TEMPLE HEIGHTS DR. OCEANSIDE, CA. 92056-3512 (760)724-5300
DRAWN BY R. BOSANO / CHECKER F. BRAVO	
DRAWING APPROVAL F. BRAVO 06-09-10	DEFLECTORS
CONTRACT No.	
UNLESS OTHERWISE SPECIFIED DIMENSIONS ARE IN INCHES TOLERANCES ARE: 2 PLACE DECIMALS ±.03 3 PLACE DECIMALS ±.010 ANGLES ± .5°	SIZE B / CAGE CODE 07M26 / DWG NO. 647.9400 / REV. B SCALE NONE / SHEET 2 OF 9

THE INFORMATION CONTAINED IN THIS DRAWING IS THE SOLE PROPERTY OF APICAL INDUSTRIES ANY REPRODUCTION IN PART OR WHOLE WITHOUT THE WRITTEN PERMISSION OF APICAL INDUSTRIES IS PROHIBITED.

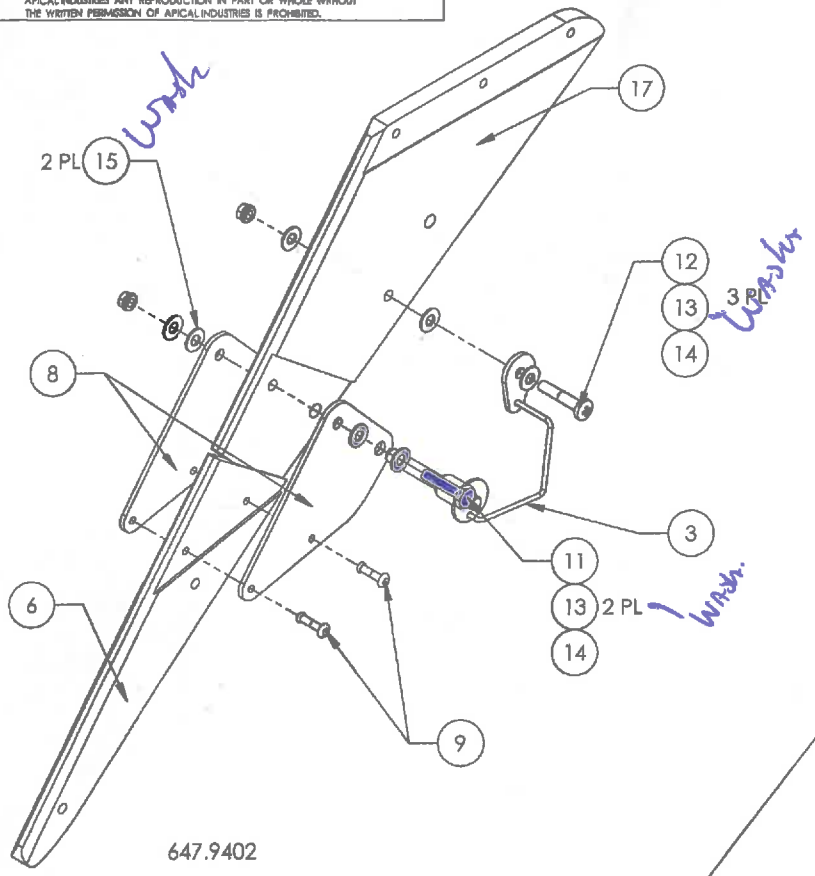

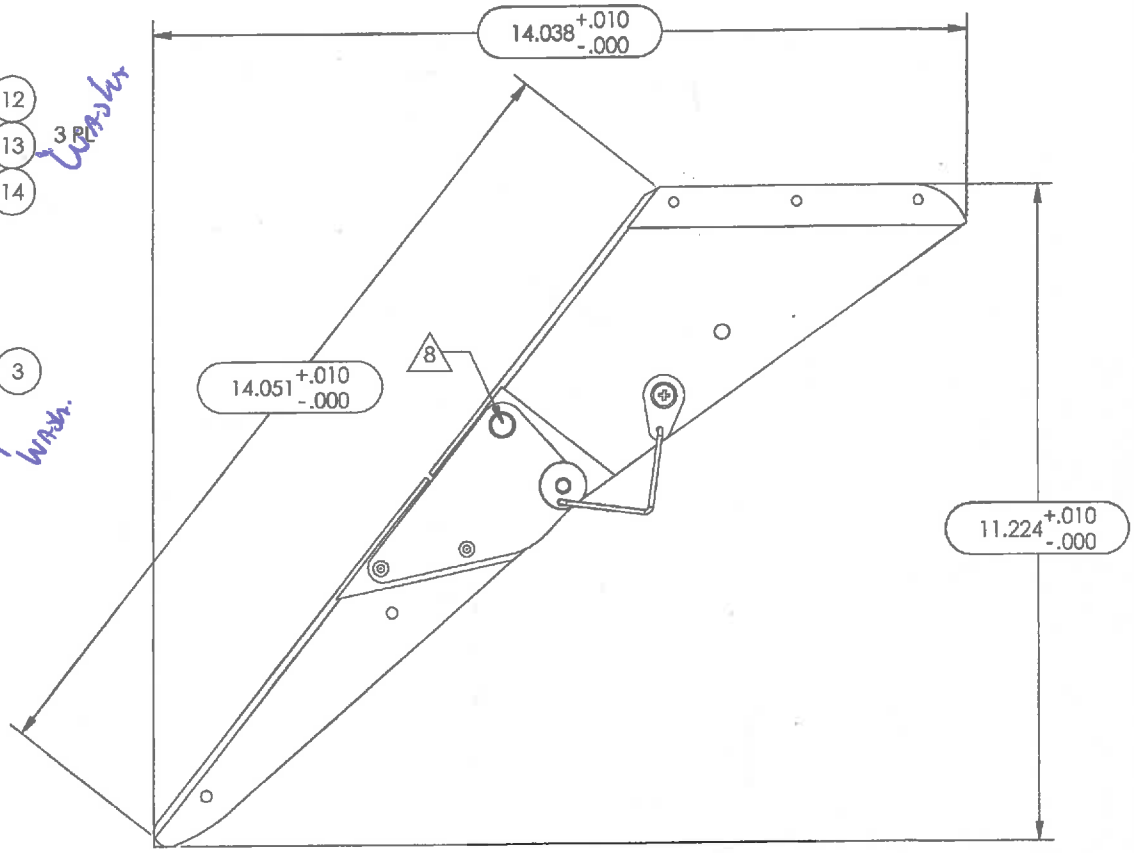

ORIGINAL DATE (MM-DD-YY) 06-09-10		APICAL INDUSTRIES	
DRAWN BY R. ROMERO	CHECKED P. BRAVO	2608 TEMPLE HEIGHTS DR. OCEANSIDE, CA. 92056-3512 (760)724-5300	
ENGINEERING APPROVAL A. BRAVO 06-09-10		DEFLECTORS	
CONTRACT NO.			
UNLESS OTHERWISE SPECIFIED DIMENSIONS ARE IN INCHES TOLERANCES ARE: 2 PLACE DECIMALS ±.03 3 PLACE DECIMALS ±.010 ANGLES ± .5°		SIZE B	CAGE CODE 07MZ6	DWG. NO. 647.9400	REV B
		SCALE NONE	SHEET 3 OF 9		

THE INFORMATION CONTAINED IN THIS DRAWING IS THE SOLE PROPERTY OF APICAL INDUSTRIES ANY REPRODUCTION IN PART OR WHOLE WITHOUT THE WRITTEN PERMISSION OF APICAL INDUSTRIES IS PROHIBITED.

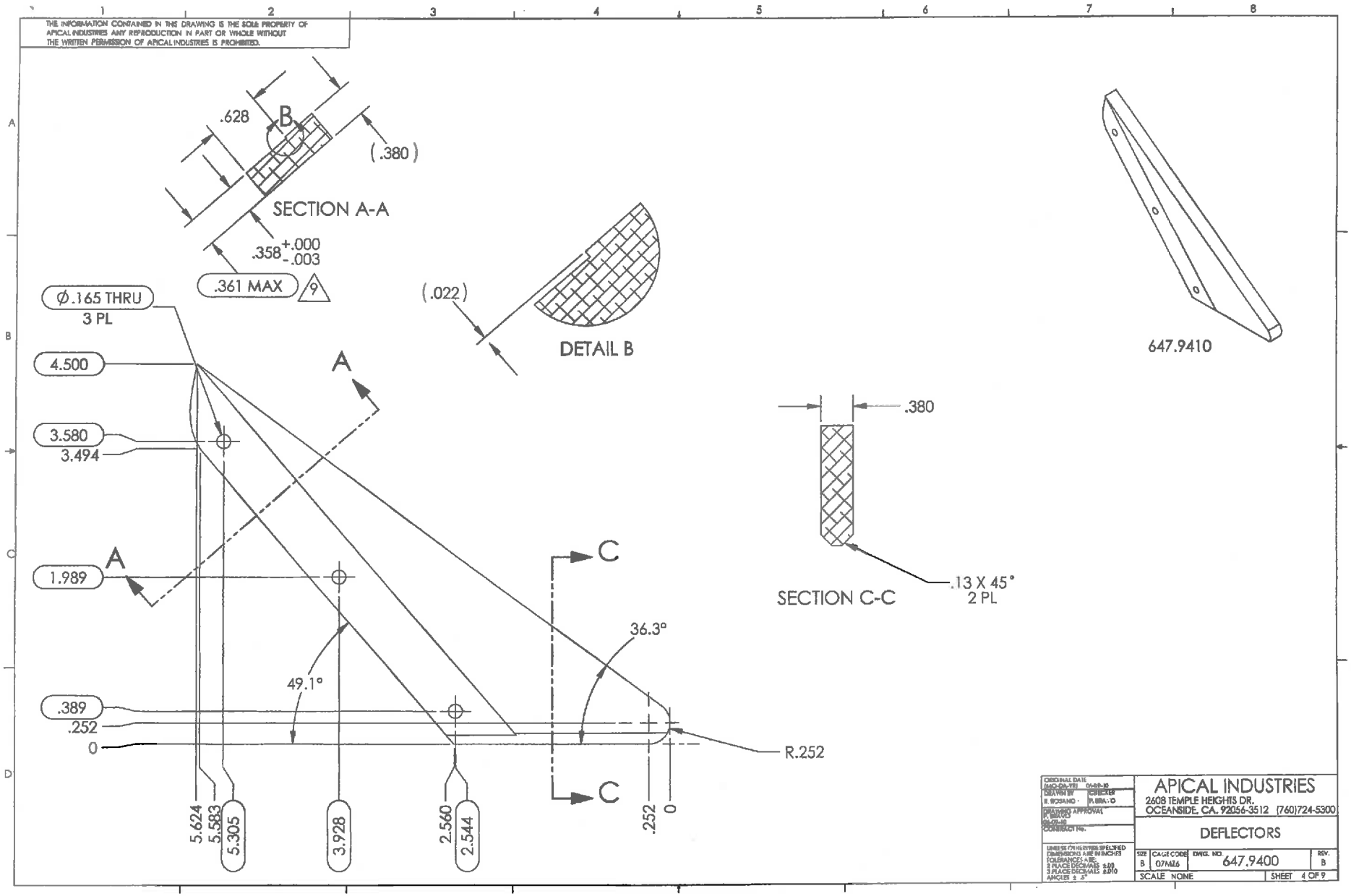

ORIGINAL DATE (MO-DA-YR)	01-08-10
DRAWN BY	CHECKED
APPROVAL	
CONTRACT No.	
UNLESS OTHERWISE SPECIFIED DIMENSIONS ARE IN INCHES TOLERANCES ARE: 2 PLACE DECIMALS ±.03 3 PLACE DECIMALS ±.010 ANGLES ± 2°	

APICAL INDUSTRIES
2608 TEMPLE HEIGHTS DR.
OCEANSIDE, CA. 92056-3512 (760)724-5300

DEFLECTORS

SIZE	CAGE CODE	DWG. NO.	REV.
B	07MZ6	647.9400	B

SCALE NONE SHEET 4 OF 9

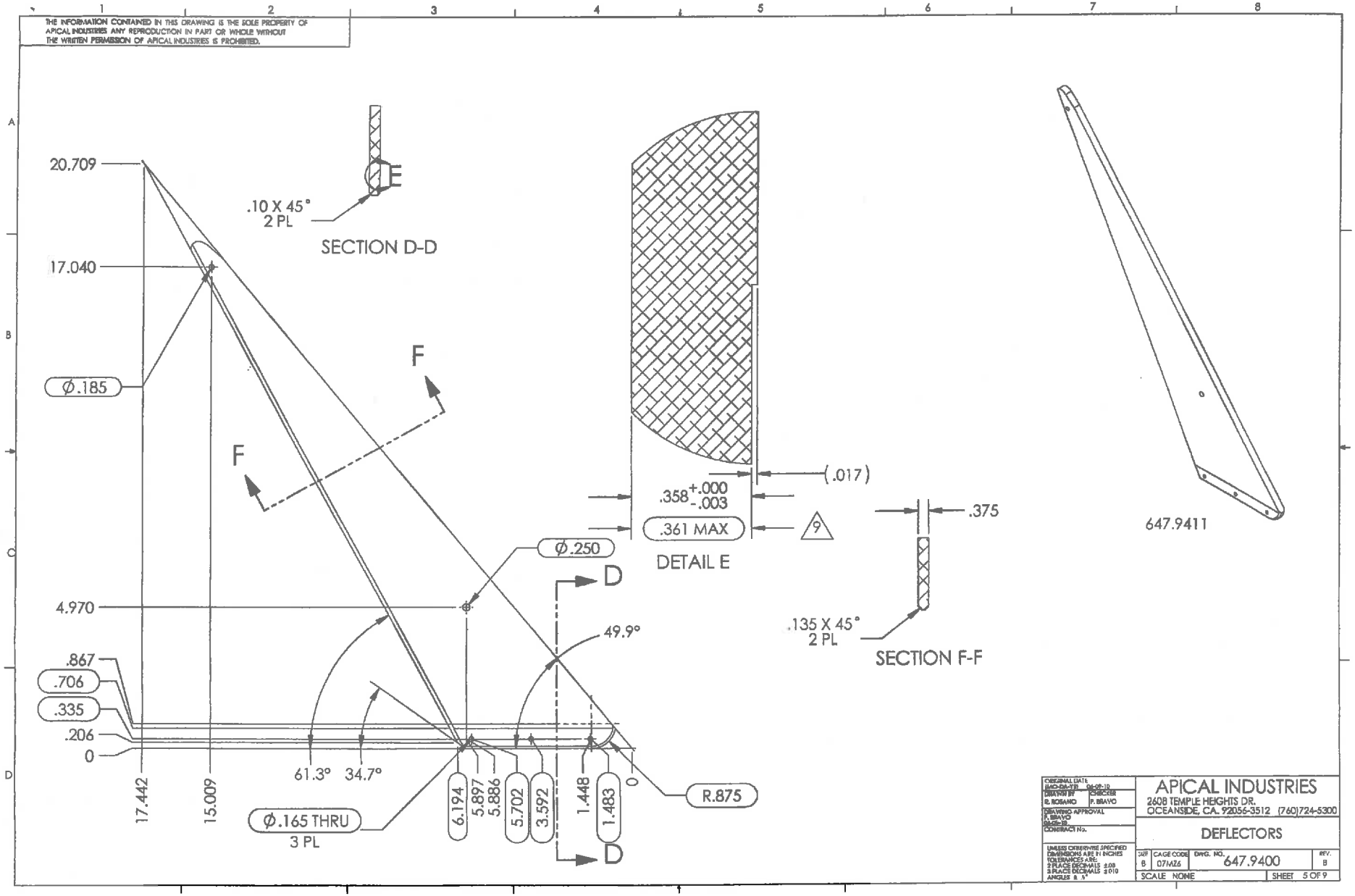

THE INFORMATION CONTAINED IN THIS DRAWING IS THE SOLE PROPERTY OF APICAL INDUSTRIES ANY REPRODUCTION IN PART OR WHOLE WITHOUT THE WRITTEN PERMISSION OF APICAL INDUSTRIES IS PROHIBITED.
20.709
17.040
Ø.185
4.970
.867
.706
.335
.206
0
17.442
15.009
61.3°
34.7°
Ø.165 THRU
3 PL
6.194
5.897
5.886
5.702
3.592
1.448
1.483
0
R.875
49.9°
Ø.250
D
F
.10 X 45°
2 PL
SECTION D-D
E
.358 +.000 -.003
.361 MAX
(.017)
9
DETAIL E
.375
.135 X 45°
2 PL
SECTION F-F
647.9411
APICAL INDUSTRIES
2608 TEMPLE HEIGHTS DR.
OCEANSIDE, CA. 92056-3512 (760)724-5300
DEFLECTORS
SIZE B
CAGE CODE 07MZ6
DWG. NO. 647.9400
REV. B
SCALE NONE
SHEET 5 OF 9

THE INFORMATION CONTAINED IN THIS DRAWING IS THE SOLE PROPERTY OF APICAL INDUSTRIES ANY REPRODUCTION IN PART OR WHOLE WITHOUT THE WRITTEN PERMISSION OF APICAL INDUSTRIES IS PROHIBITED.

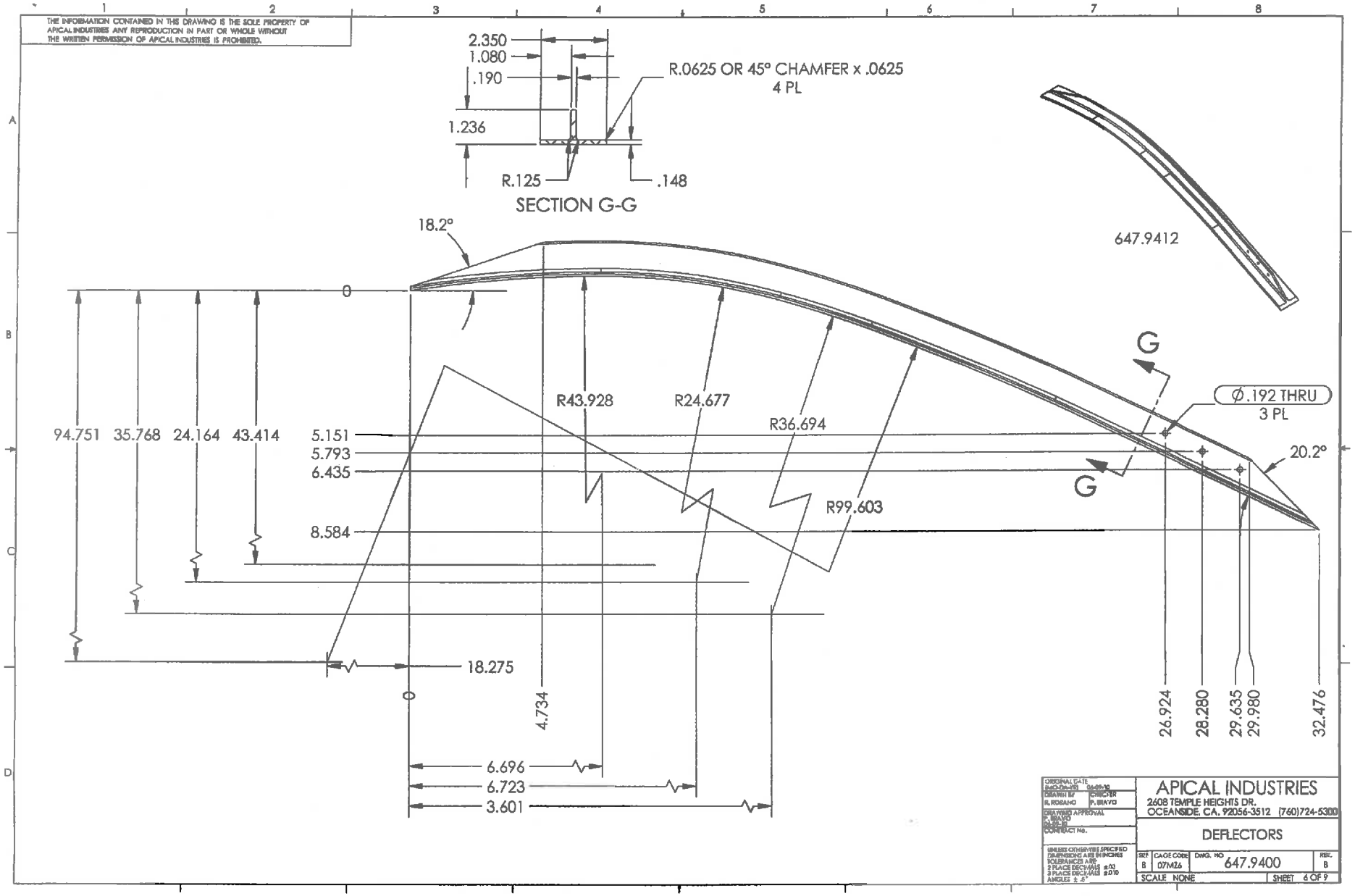

ORIGINAL DATE	04-09-10
DRAWN BY	CHECKED
R. ROSANO	P. BRAVO
DRAWING APPROVAL	
P. BRAVO	
04-09-10	
CONTRACT No.	

UNLESS OTHERWISE SPECIFIED DIMENSIONS ARE IN INCHES
TOLERANCES ARE:
2 PLACE DECIMALS ±.03
3 PLACE DECIMALS ±.010
ANGLES ± .5°

APICAL INDUSTRIES
2608 TEMPLE HEIGHTS DR.
OCEANSIDE, CA. 92056-3512 (760)724-5300

DEFLECTORS

SIZE	CAGE CODE	DWG. NO	REV.
B	07MZ6	647.9400	B

SCALE NONE SHEET 6 OF 9

THE INFORMATION CONTAINED IN THIS DRAWING IS THE SOLE PROPERTY OF APICAL INDUSTRIES. ANY REPRODUCTION IN PART OR WHOLE WITHOUT THE WRITTEN PERMISSION OF APICAL INDUSTRIES IS PROHIBITED.

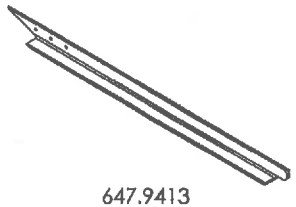

647.9413

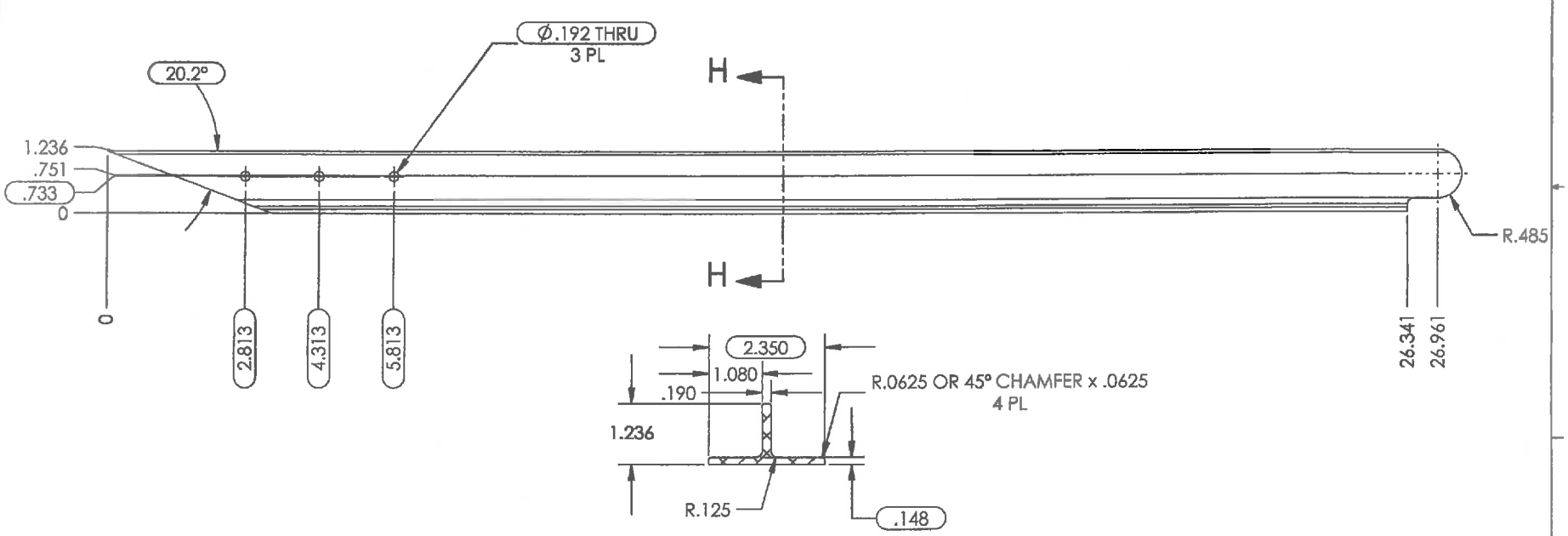

SECTION H-H

ORIGINAL DATE 04-09-10
DRAWN BY R. IROSANO
CHECKER P. BRAVO
DRAWING APPROVAL A. BRAVO 04-09-10
CONTRACT No.

UNLESS OTHERWISE SPECIFIED DIMENSIONS ARE IN INCHES
TOLERANCES ARE:
2 PLACE DECIMALS ±.03
3 PLACE DECIMALS ±.010
ANGLES ± .5°

APICAL INDUSTRIES
2608 TEMPLE HEIGHTS DR.
OCEANSIDE, CA. 92056-3512 (760)724-5300

DEFLECTORS

SIZE	CAGE CODE	DWG. NO	REV.
B	07M26	647.9400	B

SCALE NONE SHEET 7 OF 9

THE INFORMATION CONTAINED IN THIS DRAWING IS THE SOLE PROPERTY OF APICAL INDUSTRIES' ANY REPRODUCTION IN PART OR WHOLE WITHOUT THE WRITTEN PERMISSION OF APICAL INDUSTRIES IS PROHIBITED.

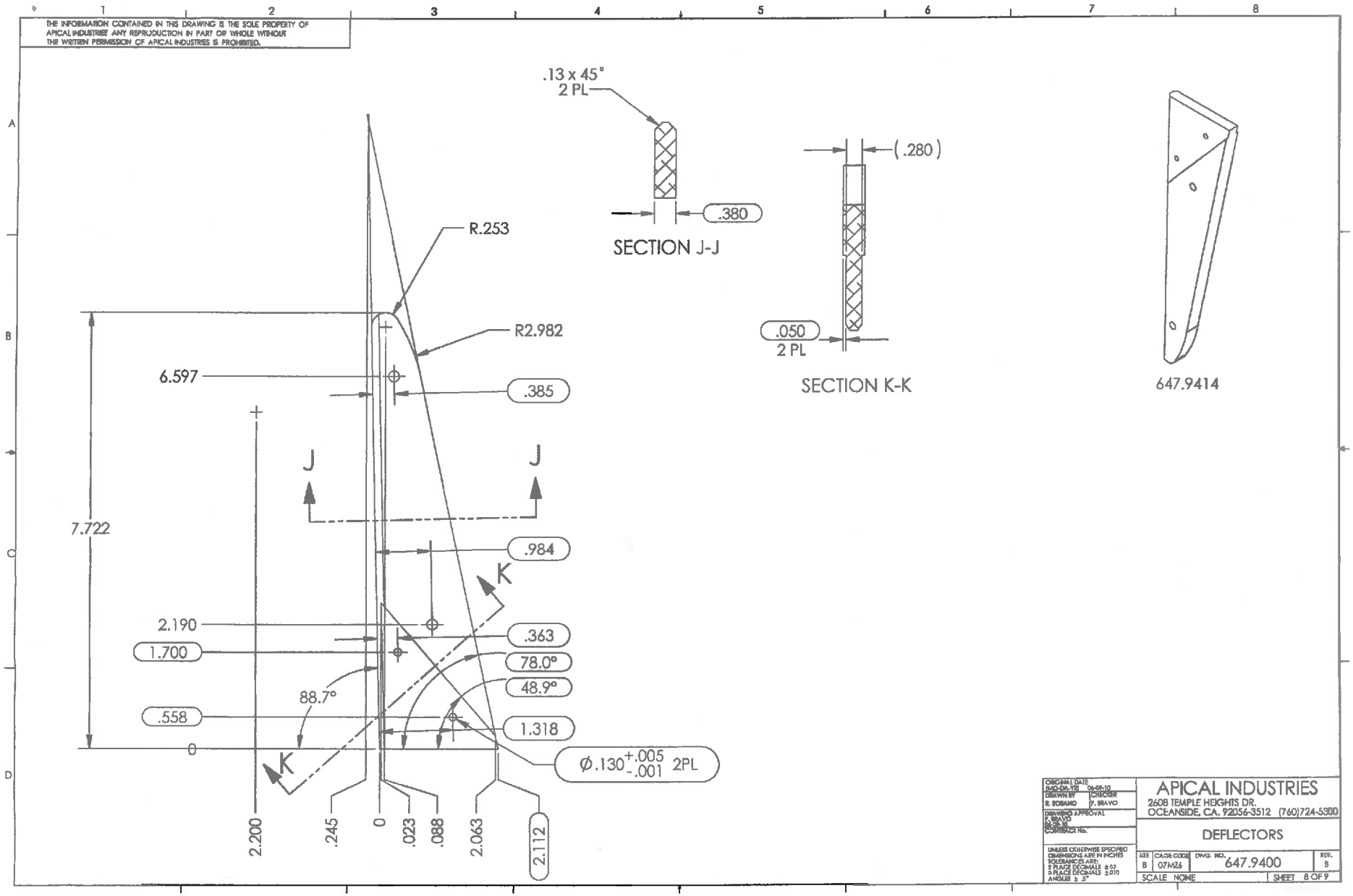

ORIGINAL DATE (MO-DA-YR)	06-09-10
DRAWN BY	CHECKER
E. ROSANO	F. BRAVO
DRAWING APPROVAL	
F. BRAVO	
REVISED	
CONTRACT No.	

UNLESS OTHERWISE SPECIFIED
DIMENSIONS ARE IN INCHES
TOLERANCES ARE:
2 PLACE DECIMALS ±.03
3 PLACE DECIMALS ±.010
ANGLES ± .5°

APICAL INDUSTRIES
2608 TEMPLE HEIGHTS DR.
OCEANSIDE, CA. 92056-3512 (760)724-5300

DEFLECTORS

SIZE	CAGE CODE	DWG. NO.	REV.
B	07MZ6	647.9400	B

SCALE NONE SHEET 8 OF 9

THE INFORMATION CONTAINED IN THIS DRAWING IS THE SOLE PROPERTY OF APICAL INDUSTRIES ANY REPRODUCTION IN PART OR WHOLE WITHOUT THE WRITTEN PERMISSION OF APICAL INDUSTRIES IS PROHIBITED.

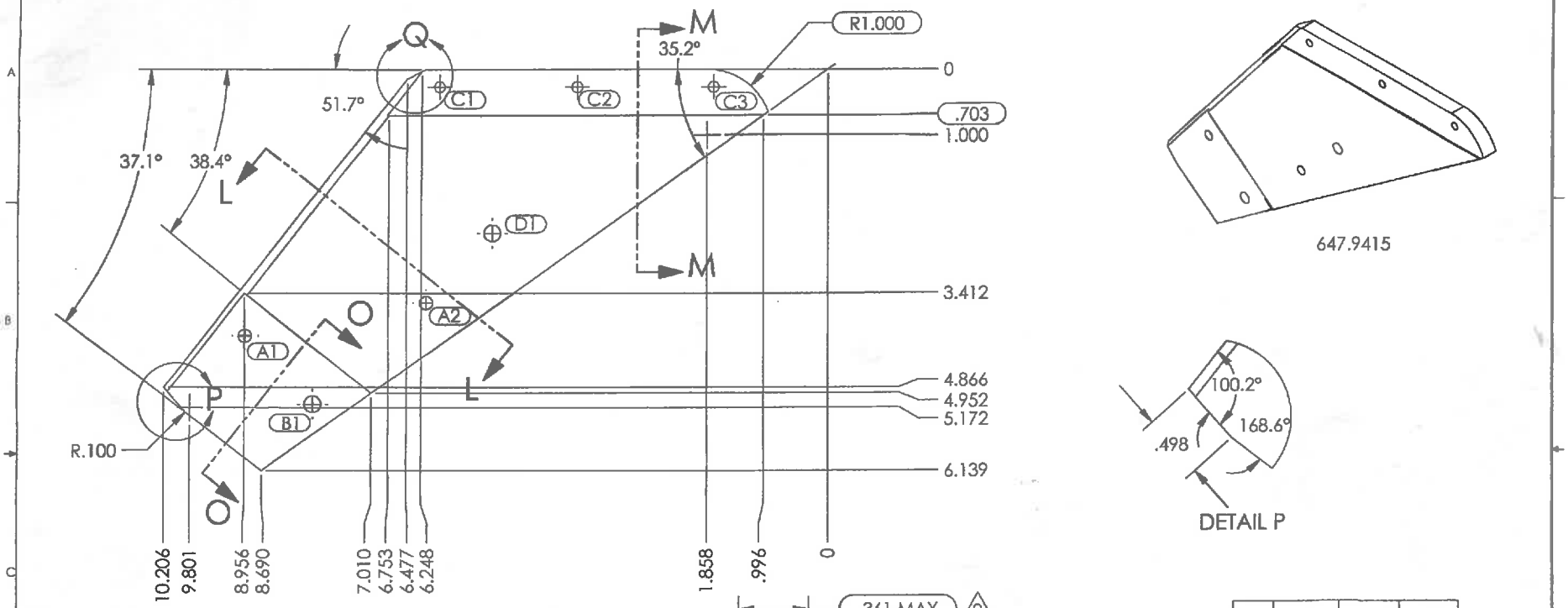

647.9415

DETAIL P

TAG	X LOC	Y LOC	SIZE
A1	-8.949	-4.066	Ø.201
A2	-6.172	-3.562	Ø.201
B1	-7.903	-5.121	Ø.253
C1	-5.978	-.267	Ø.165
C2	-3.863	-.267	Ø.165
C3	-1.758	-.267	Ø.165
D1	-5.159	-2.500	Ø.250

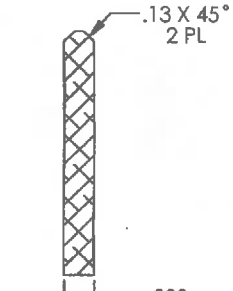

SECTION L-L

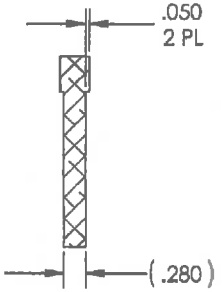

SECTION O-O

SECTION M-M

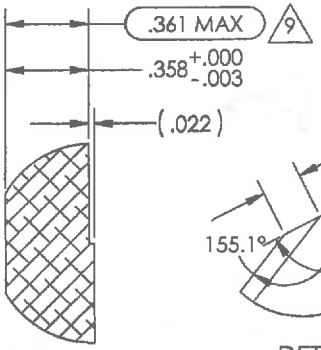

DETAIL N

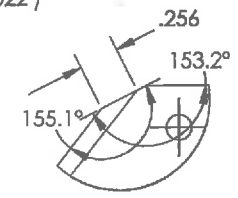

DETAIL Q

ORIGINAL DATE 06-09-10
DRAWN BY R. ROSANO
CHECKED P. BRAVO
DRAWING APPROVAL A. BRAVO 06-09-10
CONTRACT No.
UNLESS OTHERWISE SPECIFIED DIMENSIONS ARE IN INCHES
TOLERANCES ARE:
2 PLACE DECIMAL ±.03
3 PLACE DECIMAL ±.010
ANGLES ± 2°

APICAL INDUSTRIES
2608 TEMPLE HEIGHTS DR.
OCEANSIDE, CA. 92056-3512 (760)724-5300

DEFLECTORS

SIZE	CAGE CODE	DWG. NO.	REV.
B	07MZ6	647.9400	B

SCALE NONE SHEET 9 OF 9